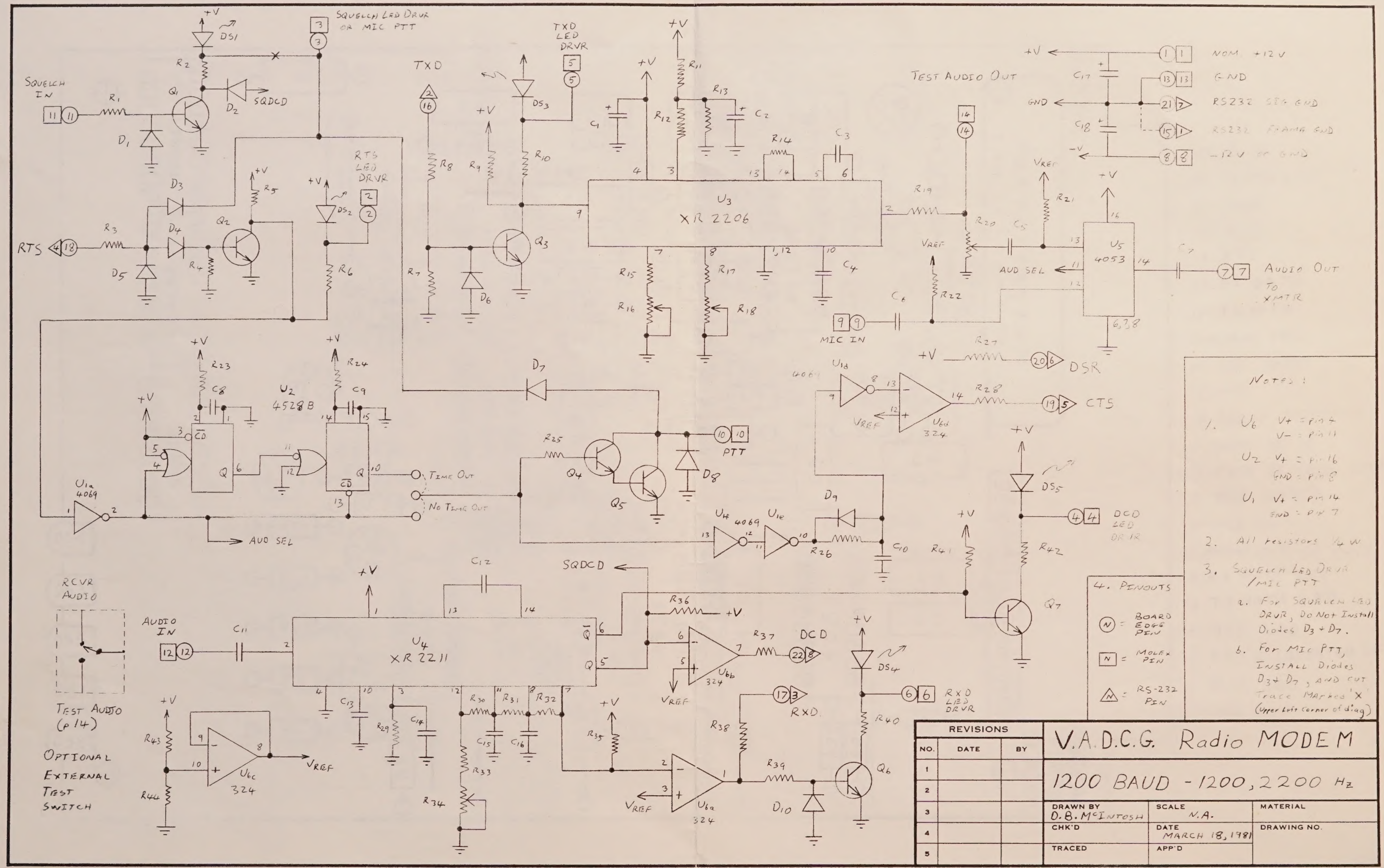

TELEDYNE POST 18AE-08E-11 X17

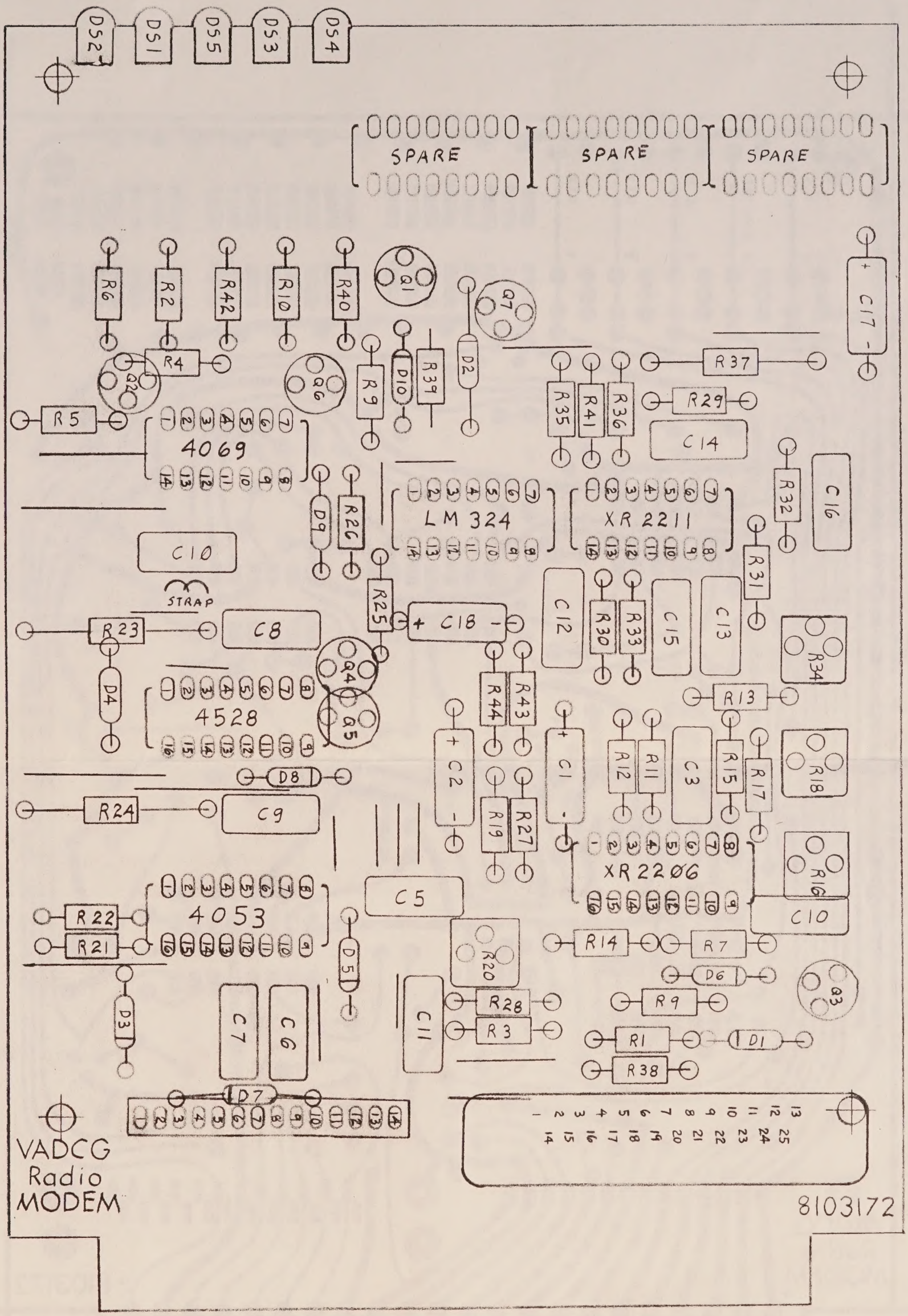

22 DCD
21 RS-232 GND
20 DSR
19 CTS
18 RTS
17 RX DATA
16 TX DATA
15 FRAME GND
14 TEST AUDIO OUT
13 GND
12 RECVR AUDIO IN
11 SQUELTCH IN
10 PUSH TO TALK OUT
9 MIC. INPUT
8 −12 VOLT
7 AUDIO OUT TO XMIT
6 RX DATA LED
5 TX DATA LED
4 DCD LED
3 PTT or SQUELTCH LED
2 RTS LED
1 +12 VOLT

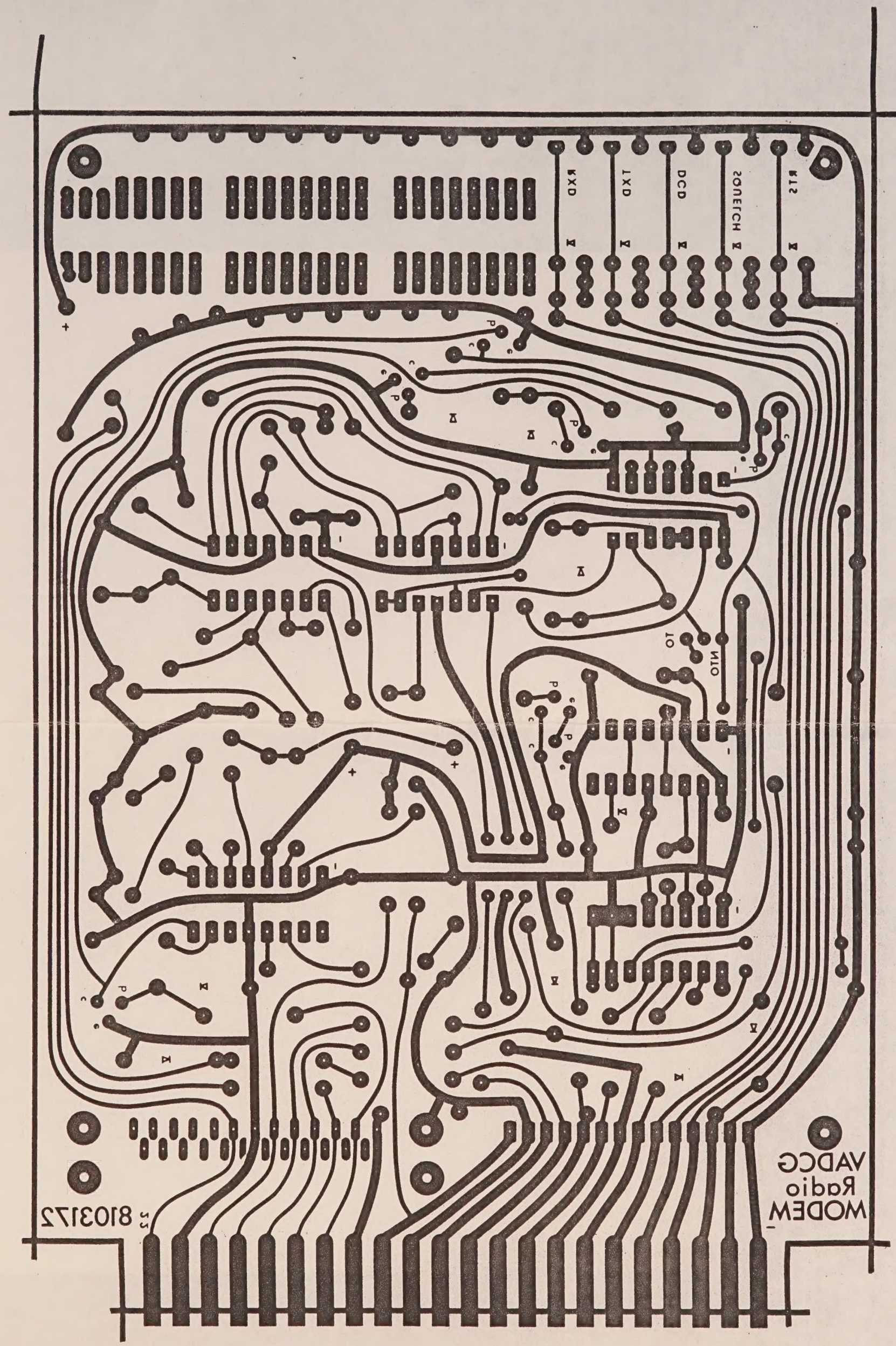
RXD
TXD
DCD
SQUELCH
RTS
OUT
OUTN
VADCG
Radio
MODEM
810372

Digitized by the Internet Archive
in 2025 with funding from
University of Maryland, Baltimore, Health Sciences and Human Services Library

https://archive.org/details/vadcg-radio-schematics

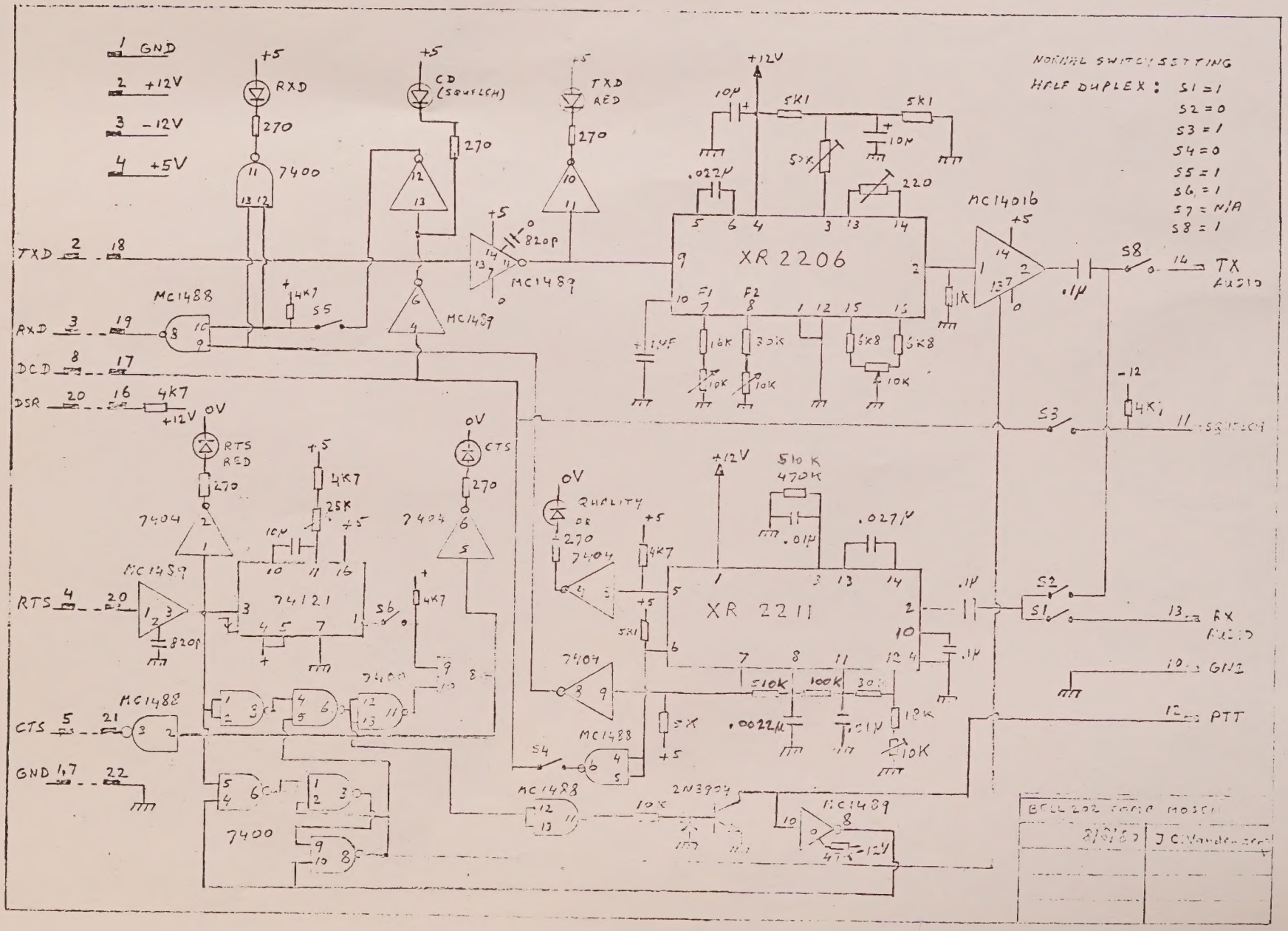
1 GND
2 +12V
3 -12V
4 +5V
RXD
CD (SQUELCH)
TXD RED
270
7400
MC1488
MC1489
4K7
S5
820P
TXD
RXD
DCD
DSR
+12V
0V
RTS RED
CTS
7404
74121
25K
10M
S6
RTS
CTS
GND
QUALITY OR
XR 2206
XR 2211
MC1401b
S8
TX AUDIO
S3
S2
S1
RX AUDIO
GND
PTT
S4
2N3904
NORMAL SWITCH SETTING
HALF DUPLEX: S1 = 1
S2 = 0
S3 = 1
S4 = 0
S5 = 1
S6 = 1
S7 = N/A
S8 = 1
BELL 202 COMM MODEM
8/8/87
J C Vandenberg